TOLERANCES:
X.XX = ± 0.010"
X.XXX = ± 0.005"
FRACTIONS = ± 1/64"
ANGLES = ± 1/2°

REVISIONS				CHK
DATE	INIT.	#	ECO	INIT.

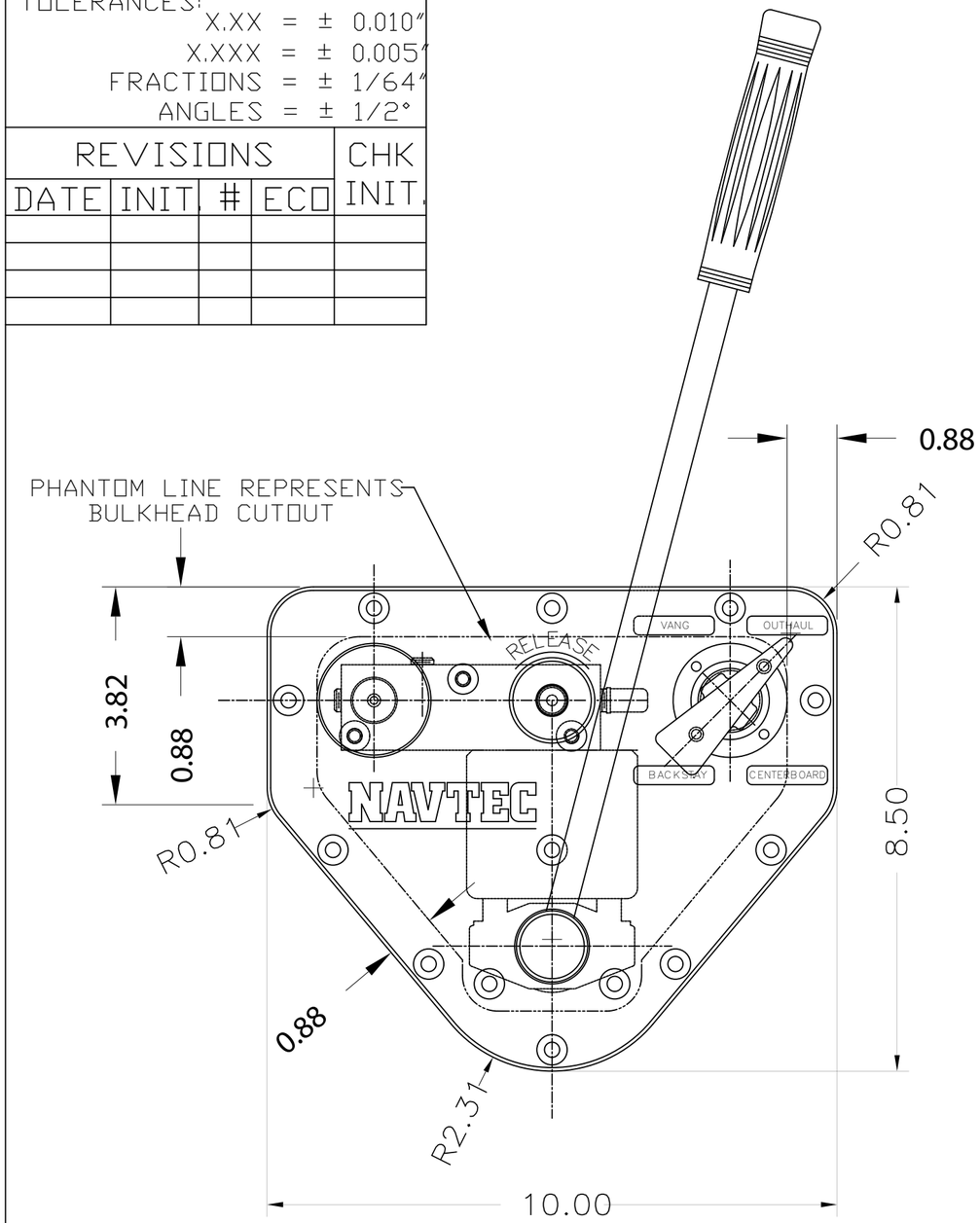

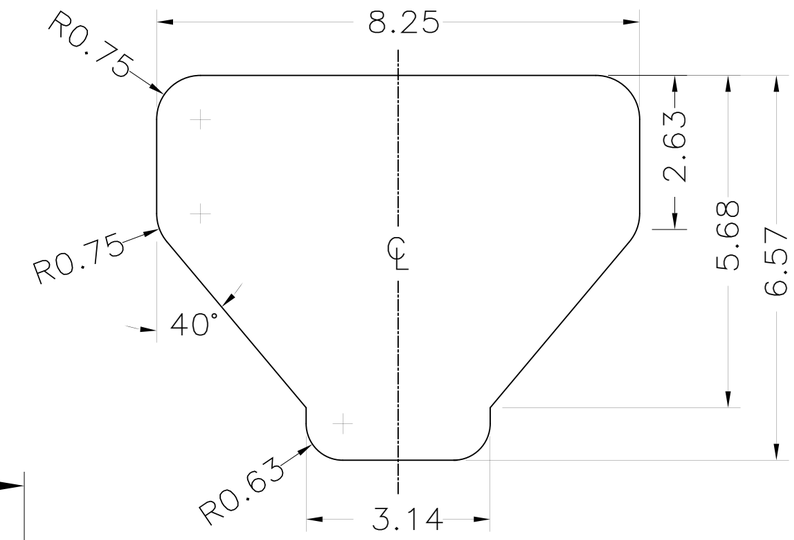

CUT-OUT DIMENSIONS

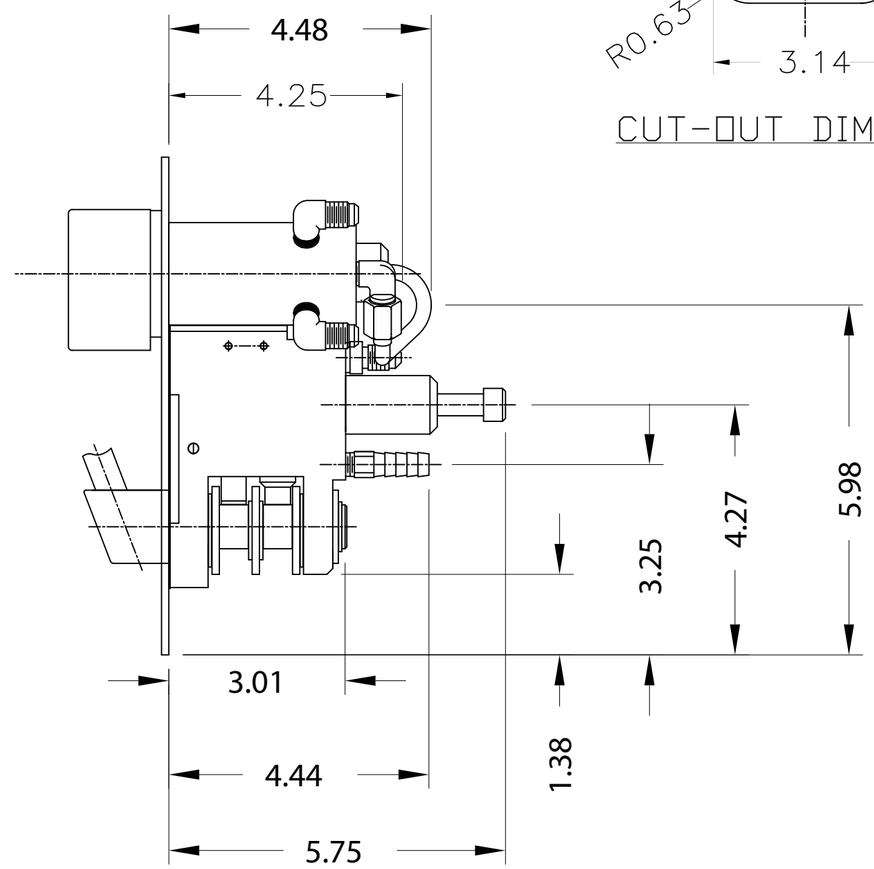

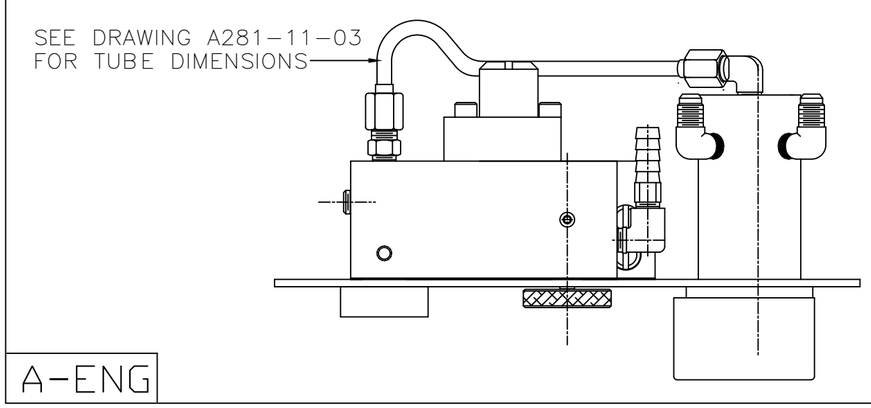

A-ENG

SYSTEM 50 PANEL ASSY		NAVTEC® HYDRAULICS
04/15/96	SCALE: A-1:4	DRAWN BY: KGS
		ENG: SPL / CHK:
A320-MF-02		SHEET: 1 OF 1
		P:A\A320\-MF-02.DWG